AFC INDUSTRIES, INC.
13-16 133 PLACE
COLLEGE POINT, NY 11356
TEL: (718) 747-0237
FAX: (718) 747-0726

THE PLANS AND DRAWINGS CONTAINED HEREIN ARE PROPRIETARY AND MAY NOT BE COPIED OR REPRODUCED MECHANICALY, ELECTRONICALY OR BY ANY MEANS WITHOUT WRITTEN PERMISSION FROM AFC INDUSTRIES, INC.

ISOMETRIC VIEW

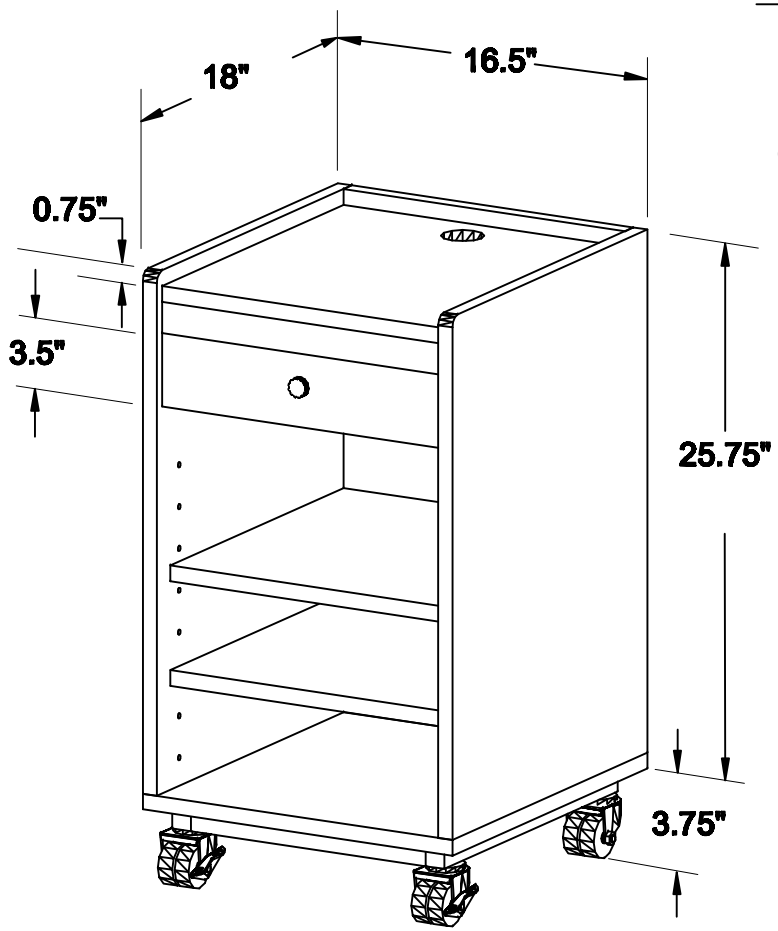

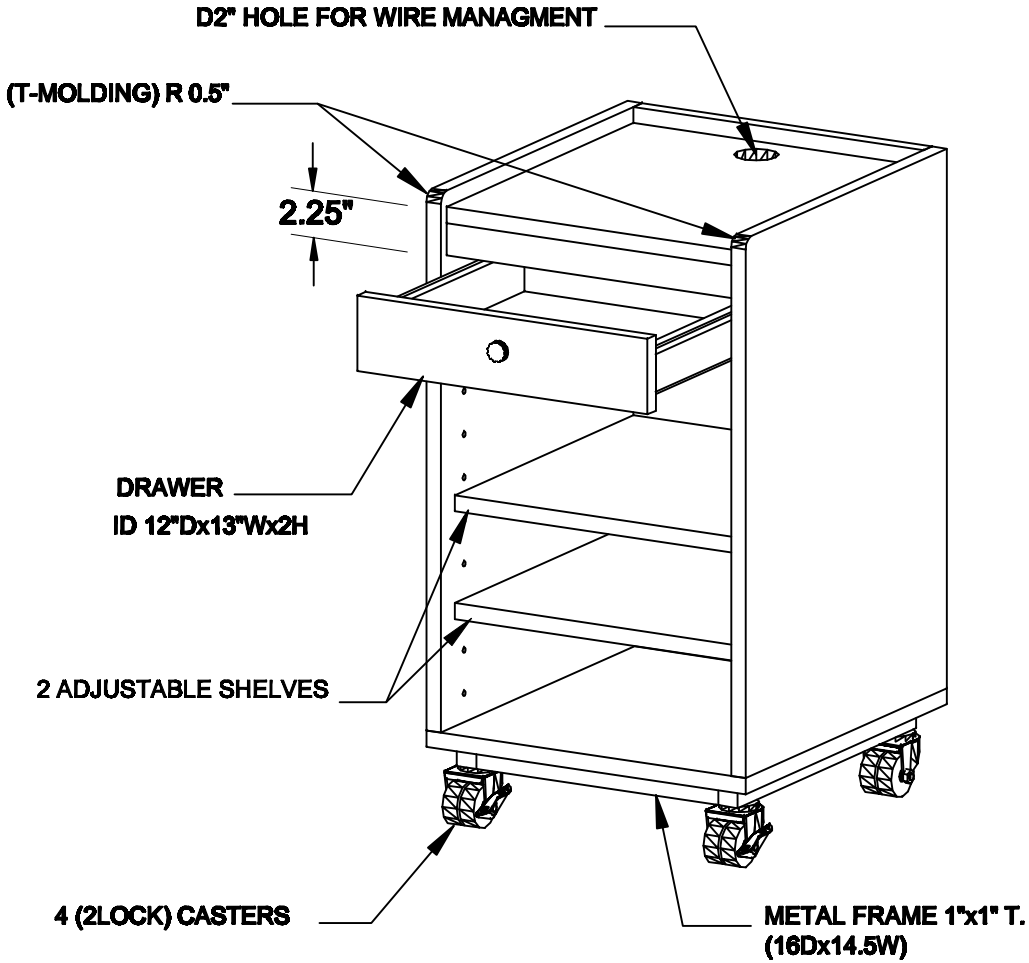

NOTES:	MATERIAL: .	DRAWN BY: KH	DATE: 10-22-09	DESCRIPTION: CART
	TOLERANCES UNLESS OTHERWISE SPECIFIED FRACTIONAL ±1/64 2 PLC. DEC. ±.01 3PLC. DEC. ±.001 ANGULAR ±1° FINISH	APPROVED		USED ON: .
		ENG:		PATH: L:\Fin.Ansambl.\DTL
		MFG:		
		QA:		PDF NAME: D0103
			SHEET: 1OF1	REV: . SIZE: A